Kofax Import Connector

Installation Guide

Version: 2.9.0

Date: 2021-02-06

KOFAX

Table of Contents

Preface

Introduction

This guide contains essential information about installing Kofax Import Connector

This guide assumes that you have a thorough understanding of Windows standards, applications, and interfaces, and also of the Internet, your network configuration and Kofax Capture.

This guide is for system administrators who are installing Kofax Import Connector, or who want to know the installation procedures, operating requirements, and various deployment scenarios.

Related Documentation

The full documentation set for Kofax Import Connector is available at the following location:

https://docshield.kofax.com/Portal/Products/KIC/2.9.0-9gw4afuhts/KIC.htm

In addition to this guide, the documentation set includes the following items:

- Kofax Import Connector Developer's Guide
- Message Connector Help
- KC Plug-In Help
- Release notes

Help

The online Help systems included in Kofax Import Connector provide online assistance for system administrators and operators alike. You can access online Help from any application window by clicking Help.

Release Notes

Late-breaking product information is available from release notes. Please read this document carefully, as it contains information that may not be included in other Kofax Import Connector documentation.

Chapter 1

Overview

Kofax Import Connector is an add-on to Kofax Capture responsible for importing messages and files in many electronic formats.

It has two main components:

- Message Connector: It is usually installed on a standalone computer. It retrieves documents from various sources, converts them to Kofax Capture compatible format and saves them in its internal storage.
- KC Plug-In: It is installed at the Kofax Capture computer. It connects to one or more Message Connectors and imports documents to Kofax Capture for further processing.

Kofax Import Connector can import messages and files from many sources:

- email messages including attachments using various email protocols (SMTP, POP3, IMAP, MS Graph)
- fax messages (via internal fax over IP server or external fax servers: Kofax Communication Server, RightFax, Biscom)
- files from a network path
- files via web services

This guide provides information about installing Kofax Import Connector, including:

- Operating requirements
- Preparations, decisions, precautions, settings, and helpful hints
- Licensing information
- Information about various deployment scenarios: failover, scaling, and redundancy options.
- Instructions for upgrading from Kofax Capture Import Connector - Advanced Email and Fax.

Chapter 2

System requirements

Before installing and operating Kofax Import Connector, please carefully read the following requirements.

System limits

These system limits apply to 64-bit installations. For 32-bit installations, the limits might be lower.

The maximum size of a message in Message Connector storage	120 GB
The maximum size of the message (complete message with all attachments after document conversion, before VRS processing) that KC Plug-In can handle	8 GB
The maximum size of the TIF files that VRS can handle	2 GB
The maximum number of pixels per page when using VRS	150 megapixel
The maximum number of Message Connector instances on a single computer	3
The maximum connections per KC Plug-In	20
The maximum passive inputs for connection	400
The maximum import connectors per connection	100
The number of destinations	Virtually unlimited
The number of rules	Virtually unlimited
The maximum system memory usage limit for KofaxConverter. **Note** The limit of the input file size may vary depending on the number of pages in a document, type of document, and type of conversion.	4 GB

Monitor resolution

The minimum display resolution is 1280 x 1024.

Disk usage

Kofax Import Connector requires approximately 200 MB of hard disk space for the application. Additional space is needed for temporary storage of transferred documents. Maximum storage size is 250 GB.

Operating systems

Kofax Import Connector is supported on the same operating systems as Kofax Capture.

Note Proper installation and functioning of Kofax Import Connector requires Universal CRT which is a Windows component. Make sure that you install the latest Windows update before running the Kofax Import Connector setup.

Software

Kofax Import Connector is compatible with the following versions of Kofax Capture:

- Kofax Capture 9

  When updating VRS, manually copy ijl20.dll from `<programs>\Kofax\Capture\ImgCtls\IJL4TTN2` to `<programs>\Kofax\Capture\ImgCtls\bin`.
- Kofax Capture 10.x
- Kofax Capture 11.0

VRS version 5.1.1 with Fix Pack 12 or higher

For installing and operating Kofax Import Connector, install .NET Framework 4.8 for both Message Connector and KC Plug-In.

Kofax Monitor 6.x - 7.x can be used to monitor Kofax Import Connector.

Use the internal conversion tool included in Kofax Import Connector (KFXConverter) or one of the following for converting Microsoft Office files:

- Apache OpenOffice (certified version 4.1.7)
- LibreOffice (32-bit)
- Microsoft Office 2010
- Microsoft Office 2013
- Microsoft Office 365
- Microsoft Office 2016

Use the internal conversion tool included in Kofax Import Connector or one of the following for converting HTML files:

- Microsoft Office 2010
- Microsoft Office 2013
- Microsoft Office 365
- Microsoft Office 2016
- Total HTML ConverterX

Tips:

- Do not install OpenOffice / LibreOffice and Microsoft Office 2013 on a single computer. Document conversion via Microsoft Office 2013 may fail.

- Use Internet Explorer to access Message Connector user interfaces.
- Ensure that you have the appropriate license for third party software such as Microsoft Office, as these licenses are not included in the Kofax Import Connector license.
- Do not install KC Plug-In and Kofax Communication Server - Capture Connector on a single computer. Although the combination might work in test environment, it is not supported for production use.

Fax over IP infrastructure

Kofax Import Connector requires fax over IP environment to receive faxes over IP networks.

- The fax over IP supports both G.711 passthrough mode and T.38 mode.
- The fax over IP system must support either H.323 or SIP signaling.
- When using H.323, one of the following connection options must be supported:
  - Integration as H.323 trunk like a standard gateway
  - Integration via H.323 gatekeeper as terminal
  - Integration via H.323 gatekeeper as gateway
- When using SIP, one of the following connection options must be supported:
  - Integration as SIP gateways with optional UserId/Password authentication
  - Integration via SIP registrar with optional UserId/Password authentication

  In both cases SIP via UDP/IP must be supported.
- The IP system must support VoIP using G.711 (A-law or u-law)
- If you want to use T.38, the mode changes from Voice to T.38 must be signaled using H.323/SIP message (protocol based switch-over). Proprietary methods like NSE-based switch-over (may be used by gateways connected via SCCP protocol to an IP environment) are not supported.

Contact Kofax staff for more detailed information about compatibility, configuration and hints with various different FoIP systems.

Third party fax servers

Kofax Import Connector can connect and import messages from the following third party fax servers (minimum versions listed):

- RightFax 9.0
- Biscom 5.0.5
- Kofax Communication Server 9.1

Note After installing RightFax client software version 9.x under Windows Server 2012 operating system, you must register two RightFax libraries using the following commands (assuming default installation path):

```
C:\Windows\System32>regsvr32 "C:\Program Files (x86)\RightFax\Shared Files
\rfaxui.dll"
C:\Windows\System32>regsvr32 "C:\Program Files (x86)\RightFax\Shared Files
\rfcomapi.dll"
```

No manual registration is necessary with RightFax client software version 10.x.

Formats for document conversion

Kofax Import Connector supports the following document formats for conversion with various third-party tools.

Document formats	Microsoft Office	Apache OpenOffice / LibreOffice	Total HTML ConverterX	Tools embedded in Message Connector	KFXConverter
Word documents [1,8]	Yes	Yes		Yes	Yes
Excel documents [1,8]	Yes	Yes		Yes	Yes
PowerPoint documents [1,8]	Yes	Yes		Yes	Yes
Text documents (both attachments and email body)	Yes	Yes		Yes	Yes
Apache OpenOffice documents		Yes			Yes
HTML, MHT documents (both attachments and email body) [9]	Yes		Yes	Yes	Yes
EML documents (email header embedded on the first page of email body) [6]	Yes			Yes	Yes
MSG documents [4,6]				Yes	Yes
PST files [5]				Yes	Yes

Document formats	Microsoft Office	Apache OpenOffice / LibreOffice	Total HTML ConverterX	Tools embedded in Message Connector	KFXConverter
Images (bmp, gif, jpg, png, tif, heif, heic, jfif) [2]				Yes	Yes
PDF documents, including portfolio PDFs [1,3]				Yes	Yes
compressed documents (zip, rar, 7z, tar, gzip) [1]				Yes	Yes
XML documents [7]				Yes	
EDI documents (EDIFACT, X-12) [7]				Yes	
XML Paper Specification (xps) [8]					Yes

1. Does not support conversion of password-protected documents.
2. Can convert images to the resolutions 200x200 DPI or 300x300 DPI; black & white, grayscale, or color.
3. Conversion of PDF documents with XFA forms (Adobe XML Forms Architecture) created with Adobe LiveCycle Designer requires Adobe LiveCycle environment available via network.
4. Does not support MSG documents where attachments are removed by any Microsoft Outlook archiving function; they are treated as document conversion errors.
5. Requires additional manual steps. See *Kofax Import Connector Administrator's Guide*.
6. For folder import only, the EML and MSG files are treated as if the message is arrived via email. The metadata of the message (and not the metadata of the file) is used.
7. Conversion might require third-party tools during configuration / customization. It does not require tools during operation.
8. KFXConverter supports Microsoft Office 2003 to Microsoft Office 2013. It also supports the conversion of XPS format.
9. For conversion using Microsoft Office, Microsoft Office must be installed on the computer where Message Connector is running.

Note Each conversion tool produces the desired output in a different way. As a result, switching to another conversion tool may change the look of your converted documents.

Attachment Encoding

Kofax Import Connector understands attachments with the following Content-Transfer-Encoding types:

- base64
- quoted-printable

It does not support other encoding types, such as uuencode or Xxencode.

Exchange Server throttling policies

Microsoft Exchange Server uses client throttling policies to manage the performance of Exchange Server. These throttling policies govern the resources that each user consumes on Exchange server, and enforces connection bandwidth limits, as defined and necessary.

Following are the general throttling policies.

Exchange server area	Parameter	Default value
Streaming notifications	HangingConnectionLimit	Exchange Online: 10 Exchange 2013: 3
Pull or push connections	EWSMaxConcurrency	Exchange Online: 27 Exchange 2013: 27 Exchange 2010: 10
Subscriptions	EWSMaxSubscriptions	Exchange Online: 20 Exchange 2013: 5000

When throttling polices are exceeded, EWS generates errors as shown in the following table.

Error	Throttling policy parameter	Description
ErrorExceededConnectionCount	EWSMaxConcurrency	Indicates that there are more concurrent requests against the server than the throttling policy allows.
ErrorExceededSubscriptionCount	EWSMaxSubscriptions	Indicates that the maximum subscription count of a user's throttling policy is exceeded.

Important Make sure that the throttling policy parameters of the Exchange Server are set in accordance with available hardware and network resources to avoid any errors.

Chapter 3

Deployment scenarios

The two main components of Kofax Import Connector, Message Connector and KC Plug-In can be either installed on the same computer or on different computers. One KC Plug-In can connect to multiple Message Connectors. However, a single Message Connector must not be polled by multiple KC Plug-Ins. This section shows some of the most typical scenarios.

You can use the Kofax Import Connector Performance Estimator tool to help you plan your environment. Contact Kofax sales from more information.

You can increase the performance of KC Plug-In by running multiple instances of the process (vertical scaling). To do so, increase the value of the parameter "Number of KIC process instances". The extra instances may fail to start if not enough hardware resources are available. CPUs with multiple cores usually synergize well with increased number of KIC process instances.

Standalone scenario

In this scenario, Message Connector and KC Plug-In are installed on the same computer (along with Kofax Capture). This configuration does not offer any load balancing or failover mechanisms. You can also easily run this on virtual environment for tests / demonstrations.

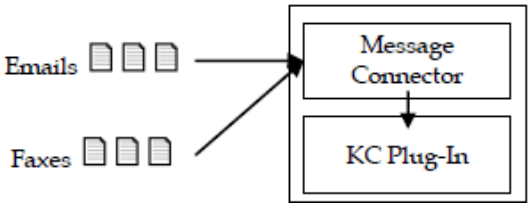

Load-balancing scenario

In this scenario, a single instance of KC Plug-In connects to two (or more) Message Connector instances. Each instance runs on a separate computer. Such a configuration would be recommended if you need to process many messages quickly. Especially document conversion can be a time consuming operation. By having multiple Message Connectors, you distribute the conversion load to several computers.

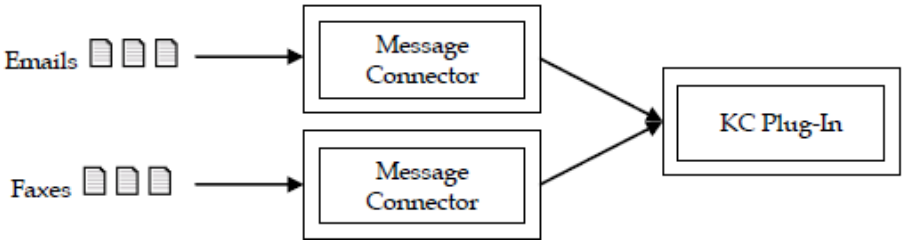

You can also install multiple instances of Message Connector on a single computer. This will not really speed up document processing. However, you can use them to establish a certain prioritization. E.g., a customer needs two electronic imports, SMTP email and fax. Customer expects large volume of email traffic and fewer high-priority faxes. By assigning fax import to a dedicated instance of Message Connector, customer can ensure that faxes are not stuck in the queue behind emails.

Failover scenario

In this scenario, two or more computers with Kofax Import Connector are grouped in a Windows failover cluster. Documents are routed to the active node. When that fails, the next node continues without longer service interruption.

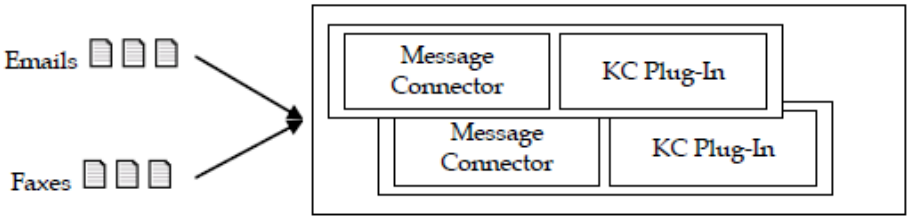

High performance scenario

In this scenario, multiple computers run in parallel and import documents from folder.

A single server of Kofax Import Connector with folder imported batches run end-to-end through Kofax Capture at a volume approximately 30 million pages/year. Four servers (two of which run as virtual machines in the same hardware box) scaled in linear fashion to approximately 125 million pages/year. If you need to handle volume in excess of 30 million pages/year, consider adding additional instances of Kofax Import Connector on additional virtual machines or physical computers.

For optimal performance, install both Message Connector and KC Plug-In on the same computer. Additional performance can be reached by tuning the value of the Prefetched Messages parameter in the Message Connector configuration. In an high-performance environment, the value 40 yielded the best results.

Chapter 4

Installation

This chapter contains information and instructions for installing Kofax Import Connector. The Kofax Import Connector includes two main components:

- Message Connector
- KC Plug-In

When you install Message Connector and KC Plug-In via the splash screen as described in the subsequent sections, setup log files are automatically written to the TEMP folder of the Windows user (for example, on Windows 7 this is `%USERPROFILE%\AppData\Local\Temp`): KCPlugin.log, Mc.log, Mc02.log, Mc03.log.

Install Message Connector

The Message Connector is primarily responsible primarily for collecting messages from various sources, converting them to a format compatible with Kofax Capture and saving them in its internal storage.

This component may be installed on the Kofax Capture computer. However, for performance reasons, we recommend you to install Message Connector on a separate computer that can be accessed by Kofax Capture via network.

With the default configuration, Message Connector uses the following port:

- TCP port 25086 – used for web interface between KC Plug-In and Message Connector

Additional ports might be used, depending on the configured features:

- TCP port 25 – used for SMTP
- TCP port 1720 – used for fax over IP via H.323
- UDP port 5060 – used for fax over IP via SIP
- TCP ports 25087, 25088 – used for web services

If other applications use any of these ports, you must change them in Message Connector configuration. Firewall or anti-virus software are known to block traffic on the ports, especially port 25. Review the settings of these products in case of connection problems.

1. Start setup.exe from the Kofax Import Connector installation folder.
2. Click **Install Message Connector**. The setup wizard is displayed.
3. Follow the wizard, using default options.
4. Wait until Message Connector is installed. Click **Finish**.

It is also possible to install multiple Message Connector instances on the same computer. This configuration is only useful in special situations, such as:

- In network load balancing scenario (active/active Windows cluster); see Network Load Balancing.
- If you want to set up an elementary prioritization of import connectors; see Load-balancing scenario.

Install KC Plug-In

The KC Plug-In is primarily responsible for delivering messages from Message Connector to Kofax Capture.

This component must be installed on the computer that already has a supported version of Kofax Capture. See Software for information about supported versions of Kofax Capture. When using Kofax Capture Network Server, you can install KC Plug-In either on the central site or on the remote site.

1. If you are installing KC Plug-In immediately after installing Kofax Capture, restart the computer before continuing.
2. Start setup.exe from the Kofax Import Connector installation folder.
3. Click **Install KC Plug-In**. The setup wizard is displayed.
4. Follow the setup wizard, using default options.
5. Wait until KC Plug-In is installed. Click **Finish**.

Proceed with setting up licenses and configuring KC Plug-In.

Install from command line

Kofax Import Connector components can be installed from the command line.

```
msiexec /i <installer.msi> KOFAX="<path>" <options>
```

Where `<installer.msi>` is the name of the msi file.

- For Message Connector, use `MC.msi`.
- For KC Plug-In, use `KCPlugin.msi`.

`<path>` is the installation path.

- For Message Connector, use `\KIC-ED\MC`.
- For KC Plug-In, use `\KIC-ED\KCPlugIn`.

Optionally, add `<options>`:

- `/qn` - silent installation
- `/qb` - silent installation with elementary user interface (progress bar)
- `ALLUSERS=1` - install for all users
- Additional options are described here: `https://technet.microsoft.com/en-us/library/bb490936.aspx`

Install Microsoft Office

Kofax Import Connector can use Microsoft Office for document conversion.

1. Install a supported version of Microsoft Office on the same computer as Message Connector. See Software for supported versions.
2. Make sure that at least one printer is installed (required for Microsoft Excel document conversion).
3. Start all applications (Word, Excel, PowerPoint) at least once and respond to the initial prompts.
4. If you are using 64-bit version of Microsoft Office, create the folder `C:\Windows\System32\config\systemprofile\Desktop`.

Note Customers are responsible for providing appropriate licenses for third-party software.

Install OpenOffice / LibreOffice extension

Kofax Import Connector supports the conversion of Microsoft Office documents via Microsoft Office, LibreOffice or OpenOffice.org.

If using LibreOffice / OpenOffice, you must install the supported version of Kofax Import Connector LibreOffice / OpenOffice extension on the same computer as Message Connector. See Software for supported versions. Before installing, shut down all OpenOffice / LibreOffice processes (including Quickstarter).

1. Start setup.exe from the Kofax Import Connector installation folder.
2. Click **Browse**. Windows Explorer shows the content of the installation folder.
3. Go to the MC\OpenOfficeExtension folder and start Install.bat.

   This will identify the installed applications on the system and then install the extension for that application. If more than one application is installed, following priority order is used to identify the application whose extension will be installed: LibreOffice > ApacheOpenOffice > OpenOffice.org.
4. Wait until the extension is installed.
   The name of the extension appears in the list of extensions. The extension has the symbol next to its name indicating that this extension is installed for all users.

You can manage installed OpenOffice / LibreOffice extensions by selecting **Tools** > **Extension Manager** from any OpenOffice / LibreOffice application menu.

Install Total HTML ConverterX

Kofax Import Connector can use Total HTML ConverterX for converting HTML documents, such as email messages in HTML format.

1. Download the software from http://www.coolutils.com/TotalHTMLConverterX. You can use the trial version for initial testing.
2. Install Total HTML ConverterX on the same computer as Message Connector. Use the default installation path.

Install Third-Party software

Install the third-party software to the default location. See Software for the supported versions.

Note You must provide appropriate licenses for third-party software.

Access Kofax Import Connector documentation

You can access the documentation online as well as in offline mode.

Online documentation

The product documentation for Kofax Import Connector is now available at the following location:
https://docshield.kofax.com/Portal/Products/KIC/2.9.0-9gw4afuhts/KIC.htm

To launch the online help for the installed version of the product, click the Help icon on the application.

Offline documentation

To access the documentation offline, you can download it from the Kofax Fulfillment Site.
For each language, a separate documentation package is available to download as a compressed file, such as KofaxImportConnectorDocumentation-2.9.0_EN.zip for English and KofaxImportConnectorDocumentation-2.9.0_JA.zip for Japanese.

The documentation .zip file includes both help and print folders. The print folder contains all guides, such as installation guide and administrator's guide. The help folder contains online helps for KC Plug-In and Message Connector. The .zip files for Japanese language contain only the Message Connector localized help files.

1. From the Kofax Fulfillment Site, download the documentation .zip file.
2. Extract the contents of the compressed documentation file and do the following:
   - Copy the contents of the extracted KIC_mchelp to:
     `\\KIC-ED\MC\web\en\WebHelp`
     For using Japanese language help, copy the contents of the extracted KIC_mchelp to:
     `\\KIC-ED\MC\web\ja\WebHelp`

     Note If WebHelp folder does not exists, create the folder.
   - Copy the contents of the extracted KIC_pluginhelp to:
     `\\KIC-ED\KCPlugIn\Web\WebHelp`

3. Navigate to the installation folder and do the following:
   - For Message Connector help:
     a. Open configuration.xml in a text editor from the following location:
        `\\Kofax\KIC-ED\MC\web`
     b. Locate the <OnlineHelp>1</OnlineHelp> section and replace 1 with 0.
   - For KC Plug-In help:
     a. Open configuration.xml in a text editor from the following location:
        `\\KIC-ED\KCPlugIn\Web`
     b. Locate the <OnlineHelp>1</OnlineHelp> section and replace 1 with 0.
4. Save and close the configuration file.
   Clicking the Help icon will launch the help for the installed product.

Chapter 5

Windows failover clustering

Message Connector can run in a Windows failover cluster. This ensures that if one computer in a cluster fails, another continues automatically without any manual steps or prolonged service interruption.

There are two possible installation options:

- Entire Message Connector installed on the shared disk (recommended).
- Only Message Connector storage installed on the shared disk.

The following prerequisites must be met:

- Windows failover cluster must be installed and configured.

  A shared disk with 1 GB or more for the Message Connector. The shared disk must be explicitly owned by Message Connector; it will not be available for other applications.
- Third-party applications needed for document conversion, such as Microsoft Office, Apache OpenOffice, LibreOffice or TotalHtml must be installed on all cluster nodes. Make sure to install these applications to the same local path.

KC Plug-In can also run in a failover cluster.

Install Message Connector on a cluster (shared application)

1. Stop all cluster nodes except one.
2. Log on to the cluster node and install Message Connector on the shared disk.
3. If this is the first node:
   a. Start the Message Connector Configuration utility.
   b. In the **Storage File** field (**General** tab), type the path and name of the storage file on the shared disk.
   c. It is recommended to change the Trace Location (Trace Settings tab) to the shared disk as well.
   d. Save the configuration.
4. Stop the Message Connector service.
5. Change the Windows user under which Message Connector is running. The user must be a domain user with local administrator rights (same user for all cluster nodes).
6. Stop the cluster node.
7. Repeat steps 1, 2, 4, 5, and 6 for all other nodes.
8. Continue with Configure clustered service and IP address.

Message Connector configuration behaves differently when running in a clustered environment:

- When Message Connector is installed in shared application mode, the shortcuts to "Message Connector Configuration" and "Message Connector Monitor" in the start menu may only be run on the cluster node that is the current owner of the clustered Message Connector service. The shared disk with the Message Connector working folder is only available to this one cluster node.

  Do not start the configuration shortcut on other than the active node!

  To prevent erroneous situations, it is recommended to use remote desktop connection to the cluster and start the configuration tool there. For the remote connection, use the IP address described in Configure clustered service and IP address.
- When the Message Connector runs as a clustered service, the Message Connector Configuration application cannot restart the service, because the service is under control of the cluster. Simply save configuration changes, then take the service offline via Failover Cluster Management, and bring it online again.

Install Message Connector on a cluster (shared storage)

1. Log on to the cluster node and install Message Connector locally.
2. Start Message Connector Configuration utility. In the **Storage File** field (**General** tab), type the path and name of the storage file on the shared disk. It is recommended to change the Trace Location (Trace Settings tab) to the shared disk as well.
3. Change the Windows user under which Message Connector is running. The user must be a domain user with local administrator rights (same user for all cluster nodes).
4. Repeat steps 1 and 3 for all nodes.
5. Continue with Configure clustered service and IP address.

Message Connector configuration behaves differently when running in a clustered environment:

- When Message Connector is installed in shared storage mode, changes in Message Connector configuration must be performed on all nodes.
- When the Message Connector runs as a clustered service, the Message Connector Configuration application cannot restart the service, because the service is under control of the cluster. Simply save configuration changes, then take the service offline via Failover Cluster Management, and bring it online again.
- If you configure storage file to a non-default location, this file will not be removed when uninstalling the product.

Install KC Plug-In on a cluster

Prerequisites:

- Kofax Capture must be installed on all cluster nodes. The required batch classes must be available on each cluster node.

1. Stop all cluster nodes except one.
2. Log on to the cluster node.
3. Install KC Plug-In locally.

4. Configure KC Plug-In.
5. Stop the KC Plug-In service.
6. Change the Windows user under which KC Plug-In is running. The user must be a domain user with local administrator rights (same user for all cluster nodes).
7. Stop the cluster node.
8. Repeat steps 1-7 for all other nodes.
9. Continue with Configure clustered service and IP address.

KC Plug-In configuration behaves differently when running in a clustered environment:

- All cluster nodes must have the same KC Plug-In configuration.

Configure clustered service and IP address

1. On the active cluster node, start Failover Cluster Manager from the Administrative Tools.
2. Open the cluster node in the tree view and right-click Services and Applications. Select Configure a Service or Application from the context menu. The High Availability Wizard starts.
3. When prompted to select a service or application from the list, choose Generic Service.
4. In the next screen, select the Message Connector or KC Plug-In service, as appropriate.
5. In the next screen, assign a name and an IP address to the clustered service. The clustered service will be available via this name and IP address later on.

   Note If you are using SSL, use the name of the clustered service when requesting certificate.

6. When prompted to select the storage volume, select the shared disk.
7. Configure KC Plug-In, Message Connector, and all other applications (e.g., SMTP email clients) to access using the IP address assigned to the clustered service.

Availability of clustered service

Failover behavior is configurable via the Failover Cluster Management application. If the service stops, the cluster either restarts it or moves the ownership to another cluster node (i.e. starts the service on the other node). By default, there can be 2 service restarts within 6 hours before failover occurs.

For Message Connector, the failover takes about 2 - 3 minutes. During failover, no HTTP or SMTP connections are accepted. After a failover, clients can again access the Message Connector, using the same name and IP address. Configuration and stored messages are available as before. The list of POP3 mailboxes must be explicitly reloaded (this is done by the KC Plug-In).

Uninstall Message Connector on a failover cluster

1. Using Failover Cluster Administration, take the clustered service offline and delete it.
2. Uninstall Message Connector on every node.
3. If you were using the shared storage mode, manually delete the storage file from the shared disk.

Chapter 6

Network Load Balancing

The SMTP and web service part of Message Connector can run as a part of a Windows Network Load Balancing (NLB).

A Message Connector NLB cluster can be used to add scalability, load balancing, and high availability to the SMTP and web service in scenarios, where the sender SMTP or web service client can only be configured to send to a particular server machine defined by a single IP address.

The Windows NLB concept by itself provides failover only for the case when an NLB node in the cluster is completely shut down: NLB directs all TCP-based traffic automatically only to the working NLB nodes. However, NLB does not provide a failover solution for the case when a node is running but the TCP-based services on the node (in our case SMTP and web service listeners) have problems, or if the service is stopped.

Therefore, Message Connector includes a feature called NLB Port Control that monitors the health of its processes. In case of problems, the port control makes the node unavailable.

Simple variant

In this variant, either Windows NLB or a hardware NLB is used to divide load to two or more computers. All computers run in parallel. You can continue to add computers as needed.

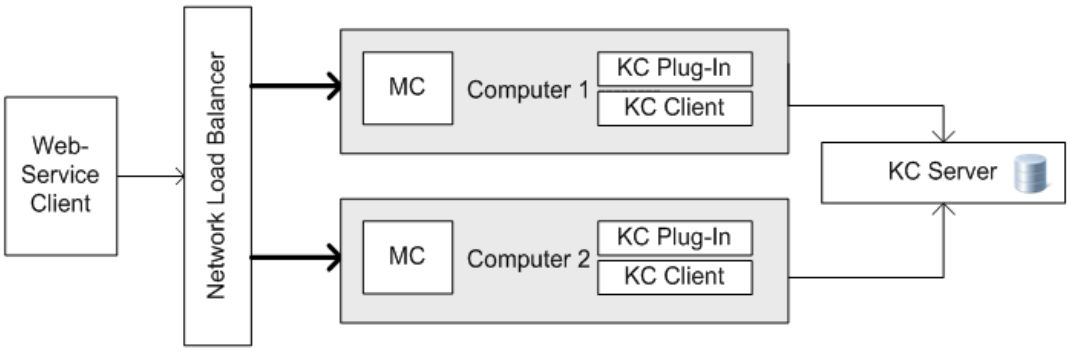

Active/active Windows cluster

In the active/active Windows cluster, two independent instances of Message Connector run on a single computer. This variant combines network load balancing with failover.

During normal operation one of these Message Connectors is active on each computer so that system load is distributed across both computers.

If one machine fails, the passive instance on the second computer is activated and continues to process documents.

The active/active cluster configuration can be used with any input service. However, if you want to use SMTP or web service input with a single IP address, an external load balancer is required.

You could also run KC Plug-In as a clustered service, but this does not support the active/active scenario, because only one instance of KC Plug-In is supported on a computer.

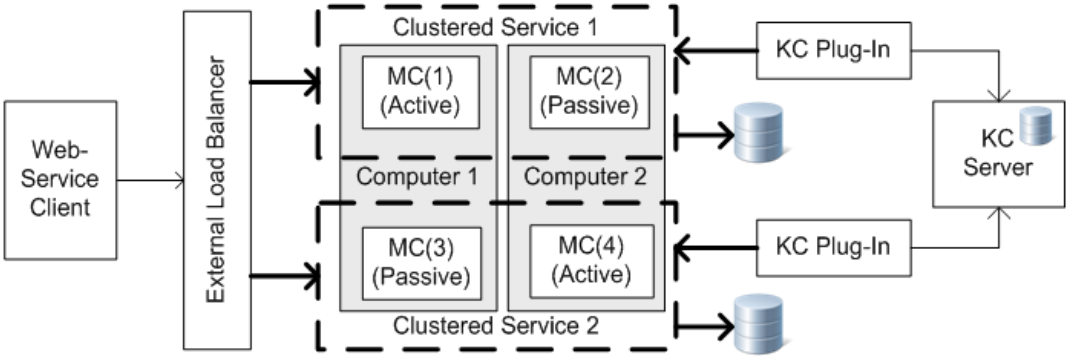

Restrictions

In certain situations, the failover is not provided for 1 to 8 seconds and an SMTP/web service connection to the common NLB IP address fails. This unavailability time window occurs (always) in the following situations:

- When Message Connector node stops abruptly: In this case it is the NLB (and not the port control) that handles this situation. NLB requires ~5 seconds to detect a failed node. NLB requires 2 to 3 seconds to remove the failed node and redistribute its load to the live nodes.
- When a node starts. Some seconds elapse between when the NLB service starts (with enabled ports - depends on cluster host configuration) and when the Message Connector with port control starts. You can eliminate most of this delay by properly configuring the cluster. See Install Windows NLB, step 4c.
- At Message Connector process crash. Some seconds (1 to 3) elapse until the Message Connector port control detects the crash and disables the ports for NLB.

Nevertheless, if the SMTP/web service client support retries, the second attempt is presumed to be outside of this time window and the connection request is directed to a working node.

Install Windows NLB

1. Install Windows NLB on each Message Connector node.

   On Windows Server, NLB has to be installed as an additional feature of the operating system.

   a. Start Server Manager.

   b. Select **Features**.

   c. Click **Add Features**

   d. Select **Network Load Balancing**.

   e. Click **Next**, then click **Install**.
2. Configure a fixed IP address on each node.
3. The recommended method to create an NLB cluster is using the Windows Network Load Balancing Manager. Run "nlbmgr".
4. Create a new cluster:

   a. Right-click **Network Load Balancing Cluster** and select **New Cluster**.

   b. Specify an IP address of one of the cluster hosts and click **Connect**. Select an interface and click **Next**.

   c. It is recommended to change the **Default state** to **Suspended** and to select **Retain suspended state after computer restarts**. Message Connector updates the state after startup. Click **Next**.

   d. Click **Add** and specify the cluster IP address. Click **OK**, then click **Next**.

   e. In the **Full Internet name** field, enter the name of the cluster computer.

   f. Select **Multicast** (unless you have at least 2 network adapters on each node). Click **Next**.

   g. Click **Add** to add port rules for SMTP (default 25) and web service input (default 25087 for HTTP and 25088 for HTTPS). Select **Multiple host** as a **Filtering mode** and set **Affinity** to **None**.

   h. Click **Finish**.
5. Add additional cluster nodes:

   a. Right-click the cluster and select **Add Host**.

   b. Specify an IP address of the node and click **Connect**. Select an interface and click **Next**.

   c. Click **Next**, then **Finish**.

Install multiple Message Connectors on one computer

Multiple instances of Message Connector on one computer are required for the active/active Windows cluster configuration.

1. Install the first instance of Message Connector normally. See Install Message Connector.
2. Install the second instance by clicking **Install Message Connector Instance 02 (optional)**. Follow the wizard to conclude the installation.

3. Install the third instance by clicking **Install Message Connector Instance 03 (optional)**. Follow the wizard to conclude the installation.

Note You cannot reinstall the second or third instance of Message Connector, if it is already installed. Use the Program and Features panel of Windows Control Panel and select the required Message Connector instance to repair/reinstall.

The default values of many parameters for the second and third instance are different from the first instance. Carefully review the configuration settings.

Chapter 7

Licensing

Kofax Import Connector is licensed via Kofax Capture. The KC Plug-In service does not start without a proper license. The following licenses are needed (depending on the features used):

- Kofax Capture station license (one license for each KC Plug-In)
- Kofax Capture scan volume license
- KIC-ED VRS license (optional; one license for each KC Plug-In)
- Kofax Import Connector feature licenses (one license for each feature on each Message Connector computer).
  - Email (SMTP, POP3, IMAP, MS Graph)
  - File (folder import)
  - FoIP (fax over IP)
  - Web Services
  - Fax Server

  For example, if you have two Message Connectors, and you run email import connector on both and web services on one, you need two email licenses and one license for web services.

You can verify that you have proper licenses for the configured features by clicking **Test Feature Licenses** in KC Plug-In configuration. You must stop the KC Plug-In service before you can test the licenses.

Chapter 8

Upgrade

This chapter contains information and instructions for upgrading Kofax Import Connector.

Upgrade from Kofax Import Connector 2.2.0 or earlier

Kofax Import Connector 2.3.0 changed the behavior of XML mapping and XML rendering. As a consequence, when upgrading from Kofax Import Connector 2.0.0 - 2.2.0 to version 2.3.0 or later, additional upgrade steps are necessary, if you are using any of the following features:

- Simple XML mapping
- Generic XML mapping
- XML rendering

No additional steps are necessary if you are using XML Import Connector compatible mappings.

Note You can upgrade to the latest version of Kofax Import Connector and continue using mappings in compatibility mode. However, as soon as you change your destination configuration, you need to perform additional upgrade steps.

Do one of the following when upgrading to the latest Kofax Import Connector:

- Let Kofax Support update your XML mapping/rendering files. See Use Kofax support.
- Reconfigure your XML mapping/rendering using MapForce/StyleVision or any similar tool. See Reconfigure XML mapping and rendering.

Use Kofax support

1. Before upgrading from Kofax Import Connector 2.0.0 - 2.2.0 to 2.3.0 or later, copy the content from the following folder to a temporary folder: `C:\ProgramData\Kofax\KIC-ED\KCPlugIn\config\Schemas`.
2. Send all files from the temporary folder, along with a list of destinations that use XML mapping/rendering to Kofax Support.

   Kofax Support updates the configuration files and returns them to you.
3. Stop the KC Plug-In service.
4. Copy the updated files back to `C:\ProgramData\Kofax\KIC-ED\KCPlugIn\config\Schemas`.
5. Upgrade to the latest version of Kofax Import Connector.

Reconfigure XML mapping and rendering

1. Upgrade to the latest version of Kofax Import Connector.

2. Stop the KC Plug-In service before making changes to the affected destinations.
3. Back up the XML mapping/rendering configuration files (directory `C:\ProgramData\Kofax\KIC-ED\KCPlugIn\config\Schemas`).
4. Edit the destination configuration and click **Show Files for Visual Designer**.
   A warning is displayed that XML mapping/rendering would stop working.
5. Click **OK** to proceed and save the configuration.
   Kofax Import Connector generates new files necessary for XML mapping/rendering. As a consequence, XML mapping and/or rendering stops working.
6. Use MapForce and/or StyleVision, or any similar to reconfigure mapping/rendering. See *Kofax Import Connector Administrator's Guide*.

Upgrade from Kofax Capture Import Connector - Advanced Email and Fax

This chapter contains information and instructions for upgrading from Kofax Capture Import Connector - Advanced Email and Fax 1.0 to Kofax Import Connector 2.0.

In general, you can simply run the Kofax Import Connector setup on a Kofax Capture Import Connector - Advanced Email and Fax computer to update the software. Please review the following hints that might apply to your upgrade.

KCIC-AEF services running under a different user

If your Kofax Capture Import Connector - Advanced Email and Fax services ran under a non-default user (not the system user), when you upgrade to KIC-ED, this information is lost. To continue using the non-default user, change the user after upgrade.

Licensing

Your Kofax Capture Import Connector - Advanced Email and Fax licenses do not function with Kofax Import Connector. Get and install new licenses.

Changed message fields

The meaning of several message fields has changed:

- The KCIC-AEF field KfxRecipientNumber is now KfxRoutingNumber.
- (FoIP only) The KCIC-AEF field kfxOriginatorName is now kfxOriginatorNumber (TSI)
- (FoIP only) The KCIC-AEF field kfxOriginatorNumber is now kfxMessageReceptionCallerID (CallerId)

FoIP and SMTP inputs not enabled by default

As the FoIP and SMTP inputs are not enabled by default, you must add the import connectors for FoIP and SMTP in the KC Plug-In configuration. Refer to *Kofax Import Connector Administrator's Guide* for instructions.

SMTP import: additional migration step needed with SSL enabled

If you were using SSL with SMTP import in KCIC-AEF, you need to set the Own Computer Name parameter in the General tab of KIC-ED Message Connector configuration. This parameter was previously (in KCIC-AEF) called OwnPCName in the Email Inbound tab.

Log files in new location

Log files and temporary files are now stored in the folder `{Common-Application-Data}\Kofax\KIC-ED\`.

ImageMagick can be uninstalled

In version 1.0, ImageMagick (a tool for converting images) was installed as a standalone item. In version 2.0, it is integrated in Message Connector and it is automatically installed along with it. After upgrading, you can safely uninstall the standalone ImageMagick via Add/Remove Programs.

Outgoing email changes

The MX lookup mode for outgoing email has changed. In 1.0, a host name configured in Message Connector was used for MX lookup. In 2.0, the **mail domain of the recipient** is used. For example, if the recipient is operator@kofax.com, "kofax.com" is used for MX lookup on the DNS. Essentially, Message Connector attempts to find the correct SMTP server automatically based on the recipient email address. If this does not work, change the SMTP Server Mode to either "A records" or "hosts file" and specify the SMTP server directly.

In version 1.0, outgoing email is used to send information about failed messages to an administrator. In 2.0, it can additionally be used to send email notifications to message originators.

Installing to new paths

If you simply upgrade the software by running version 2.0 setup, the software will be installed in the old folders, such as `C:\Program Files\Kofax\KCIC-AEF`. You can use the new default folders. See Use new paths when upgrading Message Connector and Use new paths when upgrading KC Plug-In.

Use new paths when upgrading Message Connector

If you are upgrading Message Connector from KCIC-AEF to Kofax Import Connector but want to use new installation and configuration folders, follow these steps:

1. Back up your Message Connector storage and configuration files. By default, these file can be found at:
   - `<programs>\Kofax\KCIC-AEF\Message Connector\config\solutionconfig.xml`
   - `<programs>\Kofax\KCIC-AEF\Message Connector\storage.bin`
2. Uninstall Kofax Capture Import Connector - Advanced Email and Fax - Message Connector.
3. Install Kofax Import Connector - Message Connector.
4. Stop Message Connector service.
5. Copy the backed up files to:
   - `<programs>\Kofax\KIC-ED\MC\config\solutionconfig.xml`
   - `<programdata>\Kofax\KIC-ED\storage.bin`

6. Start Message Connector configuration manually, by launching Configure.bat from `<programs>\Kofax\KIC-ED\MC\`.
7. In the **Storage File** field, enter the new path to the storage file.
8. Save and exit configuration.
9. Start Message Connector service.

Use new paths when upgrading KC Plug-In

If you are upgrading KC Plug-In from KCIC-AEF to Kofax Import Connector but you want to use new installation and configuration folders, follow these steps:

1. Back up your KC Plug-In configuration file and log configuration files. By default, these files can be found at:
   - `<programdata>\Kofax\KCIC-AEF\KC Plug-In\config\KCIC AEF KC Plug-In.xml`
   - `<programdata>\Kofax\KCIC-AEF\KC Plug-In\LogConfig\Logger.config`
2. Uninstall Kofax Capture Import Connector - Advanced Email and Fax - KC Plug-In.
3. Install Kofax Import Connector - KC Plug-In.
4. Rename "KCIC AEF KC Plug-In.xml" to "KIC-ED-KCPlugIn.xml".
5. Copy "KIC-ED-KCPlugIn.xml" to:
   - `<programdata>\Kofax\KIC-ED\KCPlugIn\Config\`
6. Copy "Logger.config" to:
   - `<programdata>\Kofax\KIC-ED\KCPlugIn\LogConfig\`
7. Start Kofax Capture Administration module from the Kofax Capture group in the Windows Start menu.
8. On the menu, select **Electronic Documents** > **Configuration**.
9. Verify that the configuration is correct.
10. Start KC Plug-In service.

Upgrade offline documentation

In case you are using offline documentation, do the following:

1. Delete the existing documentation from the following folders:
   - For Message Connector:
     `\\KIC-ED\MC\web\en\WebHelp`
   - For KC Plug-In:
     `\\KIC-ED\KCPlugIn\Web\WebHelp`
2. Follow the instructions described in the Offline documentation section.